Interfacing LCD Modules ERC2002-1 to the AT89C52 MCU

The Parallel 8Bit(6800 Series MCU)Reference Example

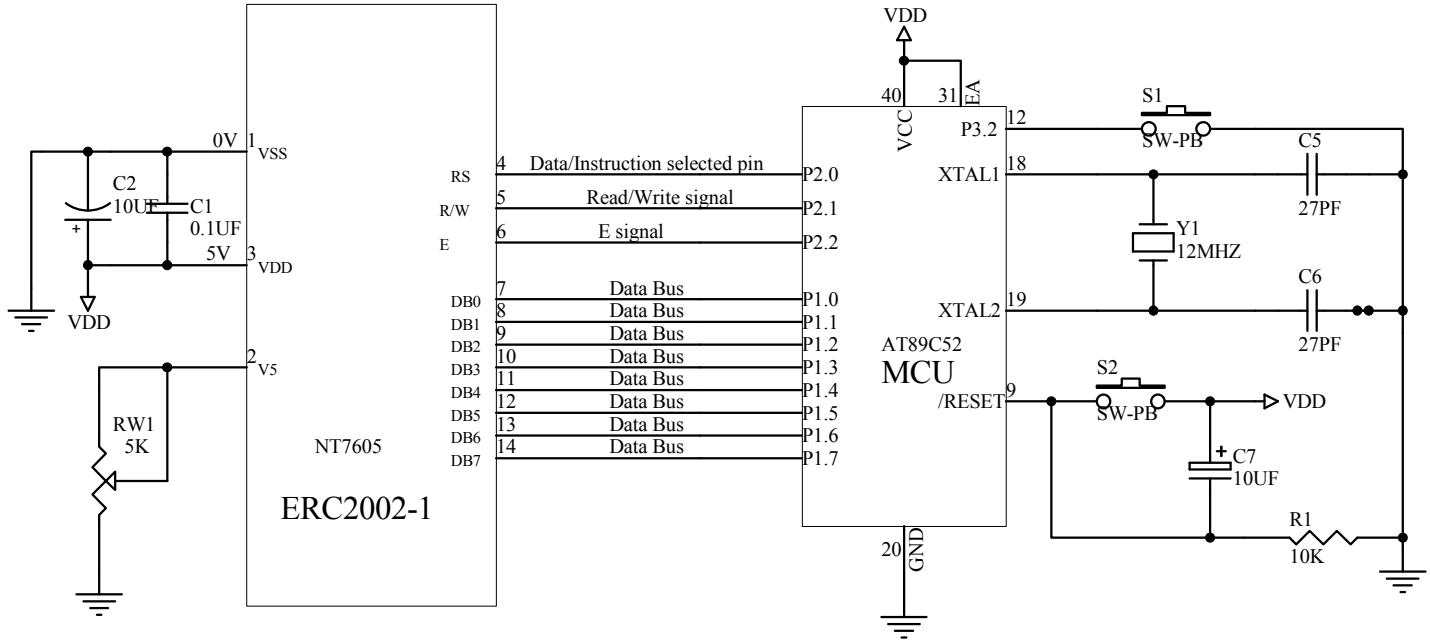

The Parallel 4Bit(6800 Series MCU)Reference Example

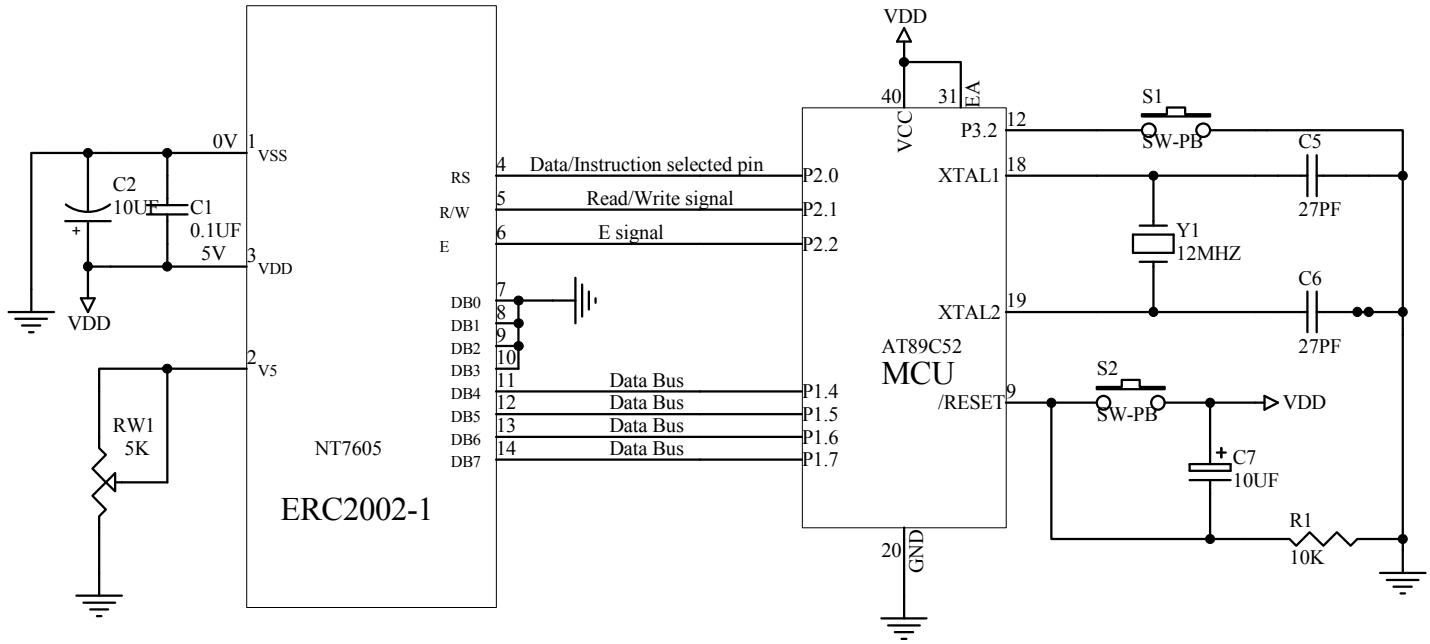

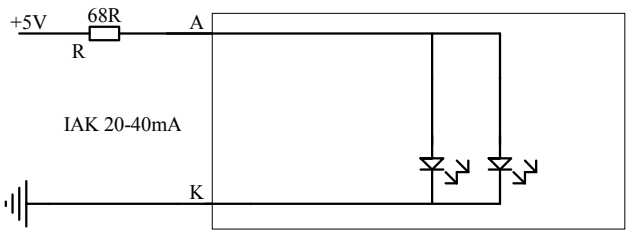

Title	EASTRISING TECHNOLOGY CO.,LTD.	
Size A	Number ERC2002-1	Revision A0
Date: 05-Jul-2023		Sheet of 1
File		Drawn By Javen