OLED Display Module to Arduoino Board (2-Wire I2C Interface)

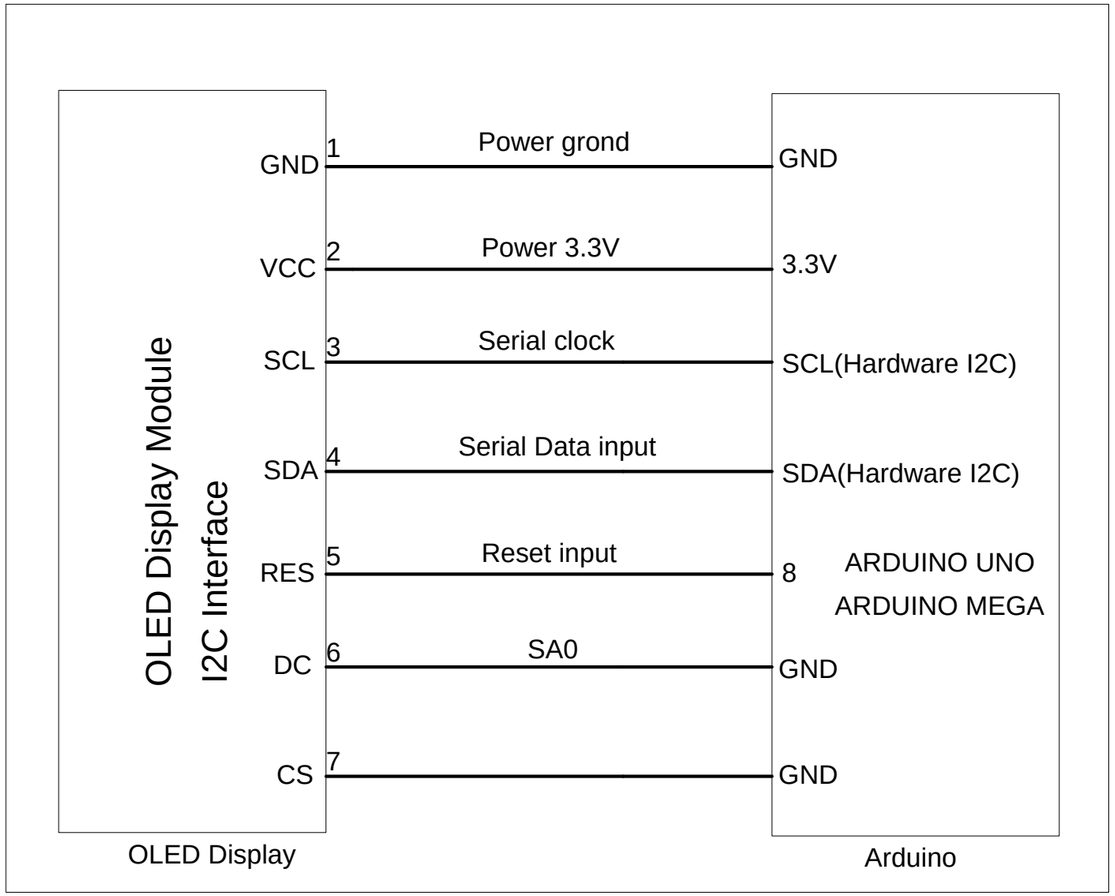

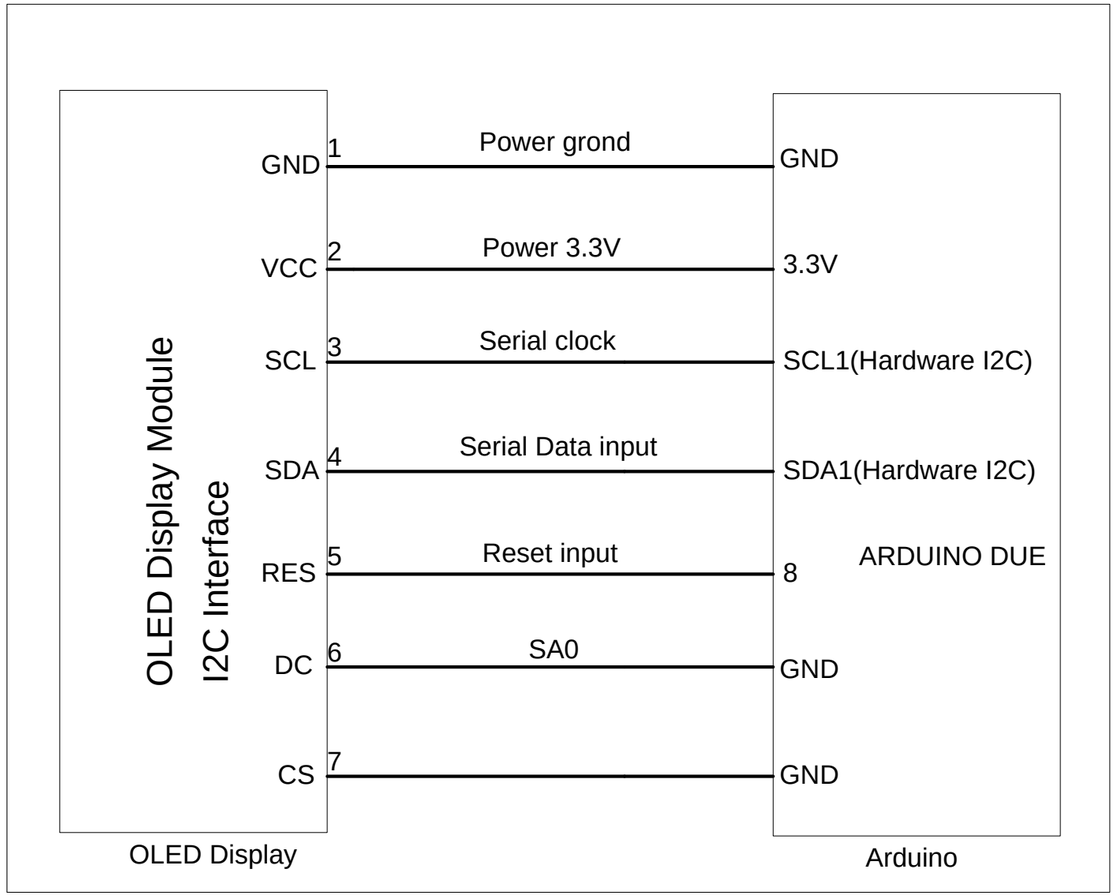

REV.	DESCRIPTION OF MODIFY	MODIFY BY	DATE
A0	1'ST DESIGN	JIM	25-Sep-2019
A1			

Title	EASTRISING TECHNOLOGY CO.,LTD. www.buydisplay.com	
Size A	Number OLED Display Module to Arduoino Board (I2C Interface)	Revision A0
Date: 25-Sep-2019	Sheet of 1	
File	Drawn By Javen	