Interfacing OLED Display to the AT89LV52 MCU

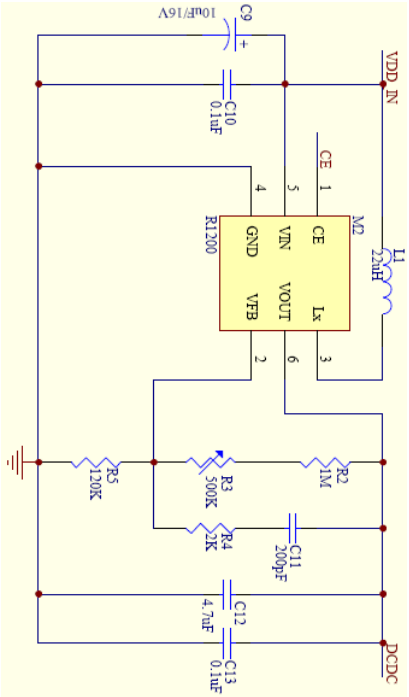

Title	EASTRISING TECHNOLOGY CO.,LTD.		
Size A	Number ER-OLED0.66-1	Revision A0	
Date: 03-Feb-2010		Sheet of 1	
File		Drawn By Javen	