Interfacing OLED Display to MCU STC89LE52RC

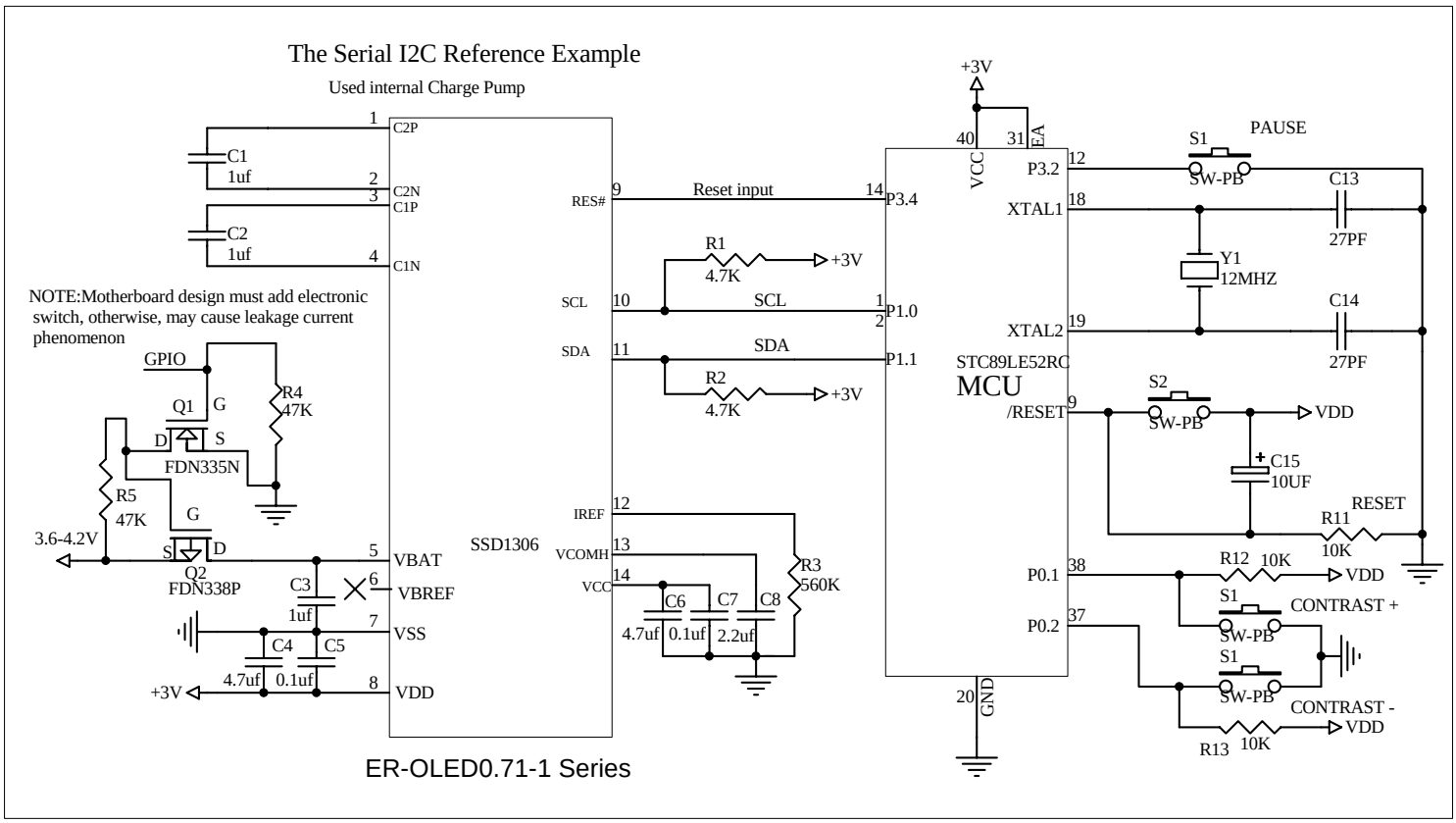

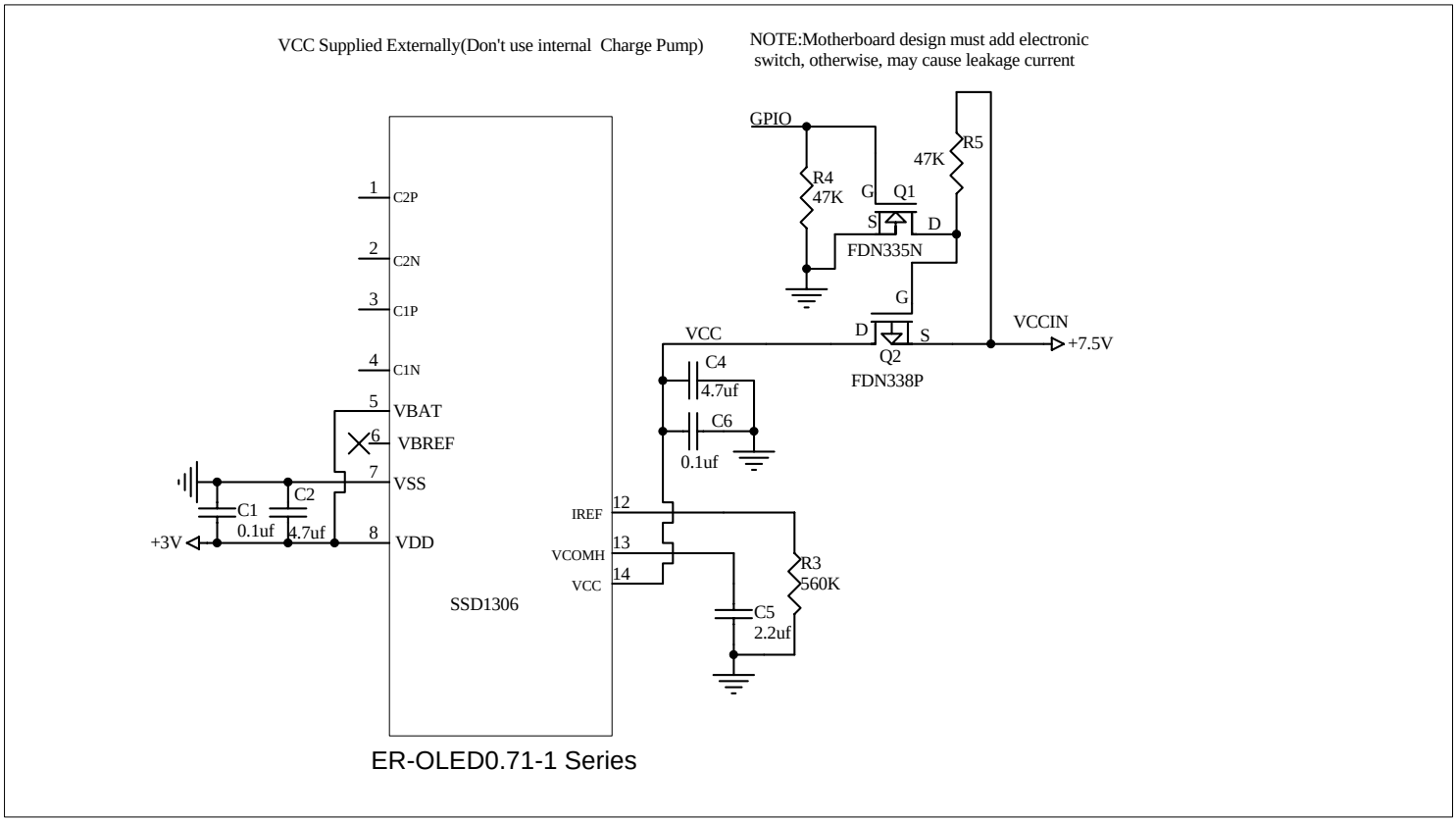

Title	EASTRISING TECHNOLOGY CO.,LTD.	
Size A	Number ER-OLED0.71-1 Series	Revision A0
Date: 19-Jan-2018	Sheet of 1	
File	Drawn By Javen	