Interfacing LCD Modules to the AT89C52 MCU

The Parallel (8080 Series MCU)Reference Example

VCC Generated by Internal DC/DC Circuit

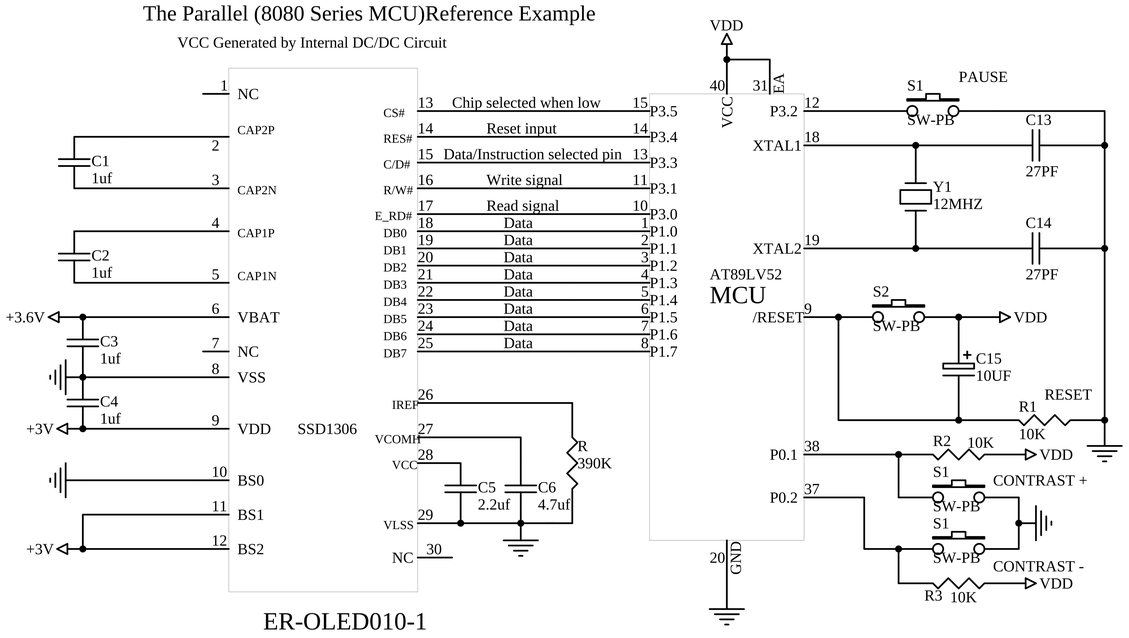

ER-OLED010-1

The Parallel (6800 Series MCU)Series MCU)Reference Example

VCC Generated by Internal DC/DC Circuit

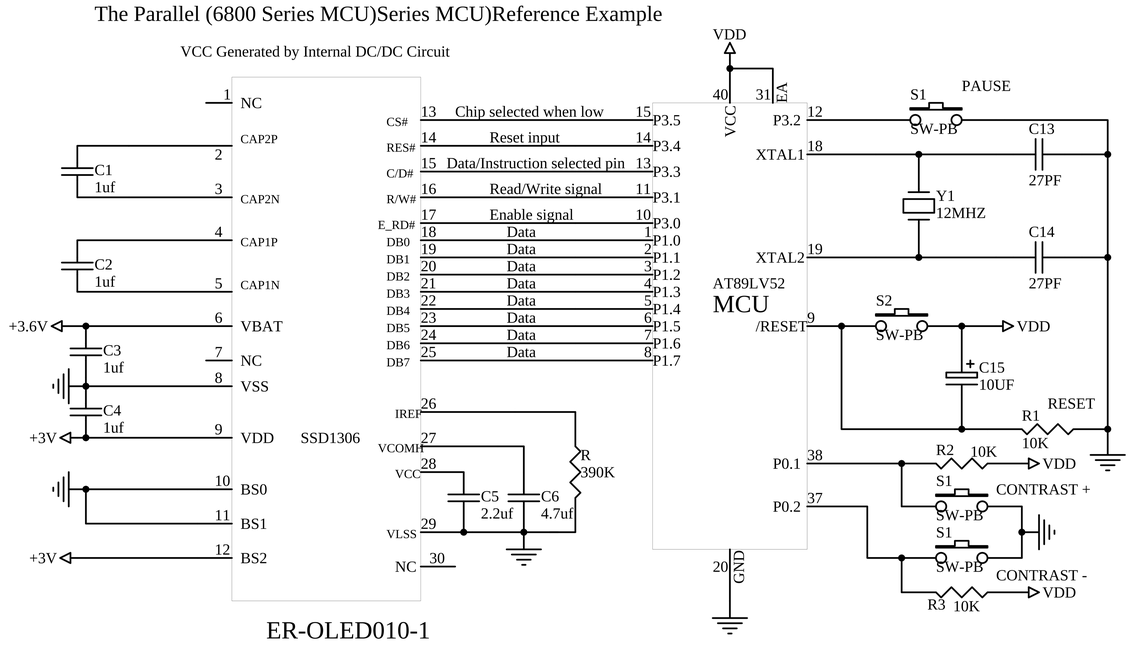

ER-OLED010-1

The Serial (4line SPI)Reference Example

VCC Generated by Internal DC/DC Circuit

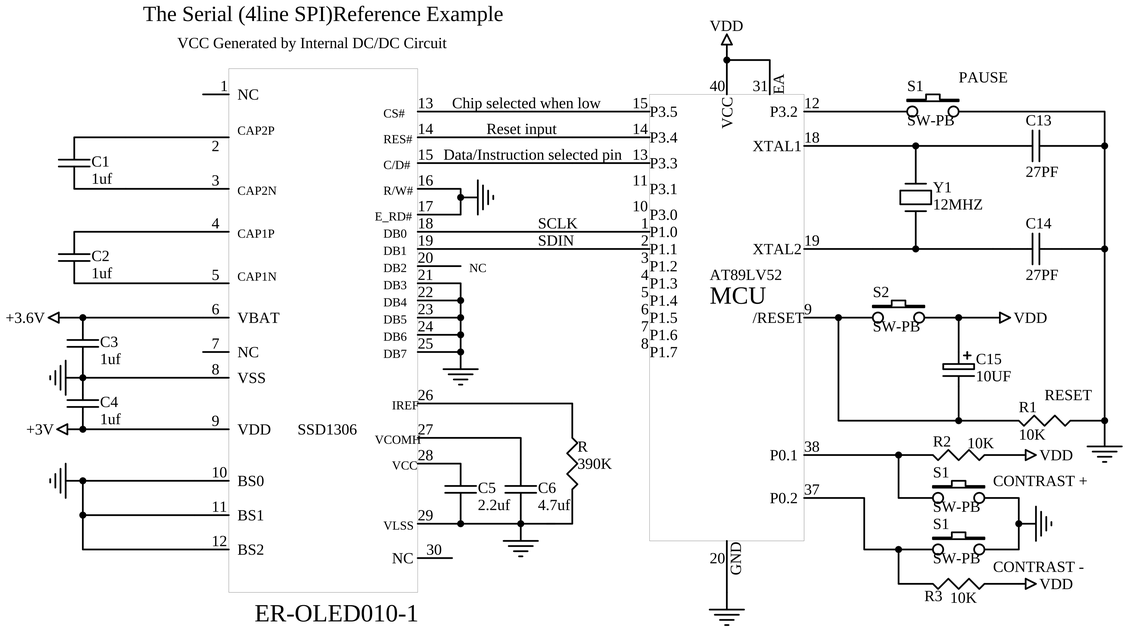

ER-OLED010-1

The Serial (3line SPI)Reference Example

VCC Generated by Internal DC/DC Circuit

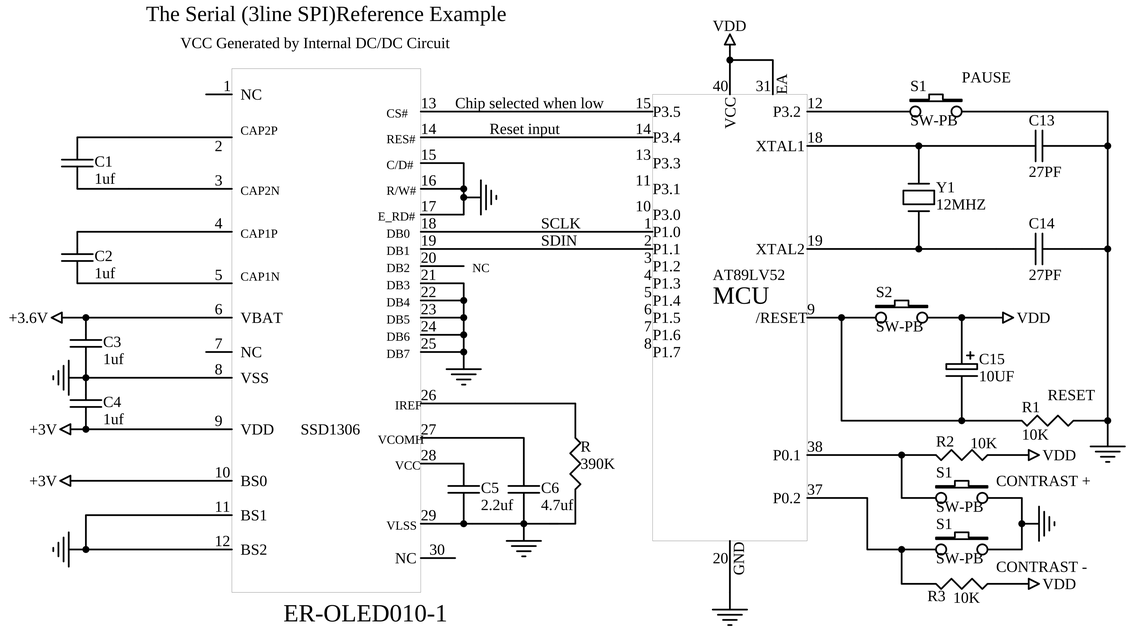

ER-OLED010-1

The Serial (I2C)Reference Example

VCC Generated by Internal DC/DC Circuit

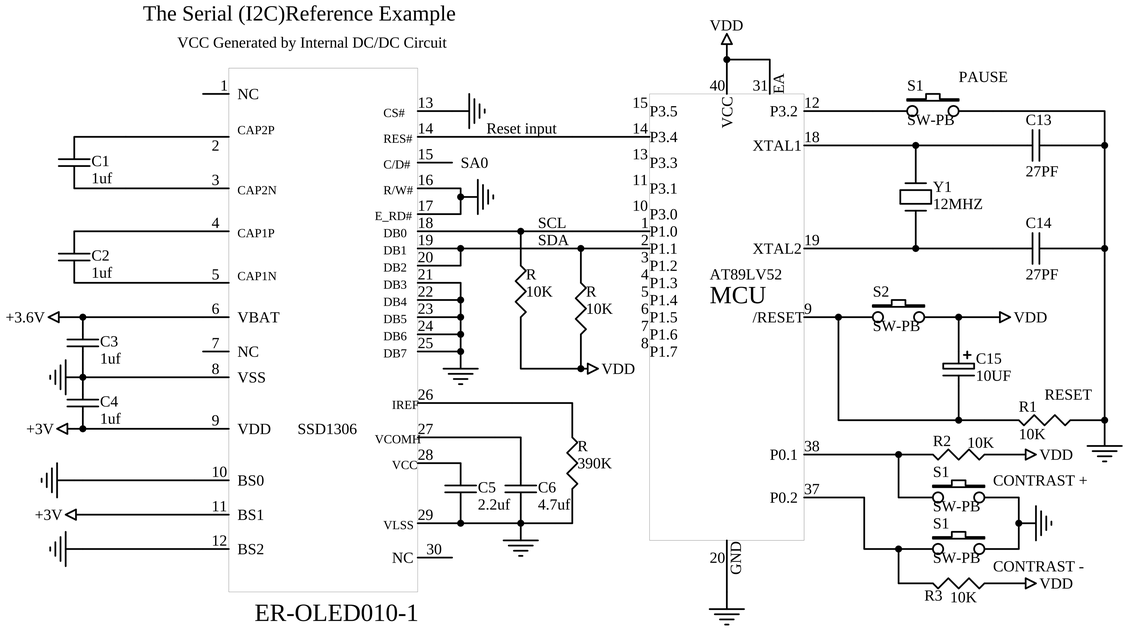

ER-OLED010-1

VCC Supplied Externally

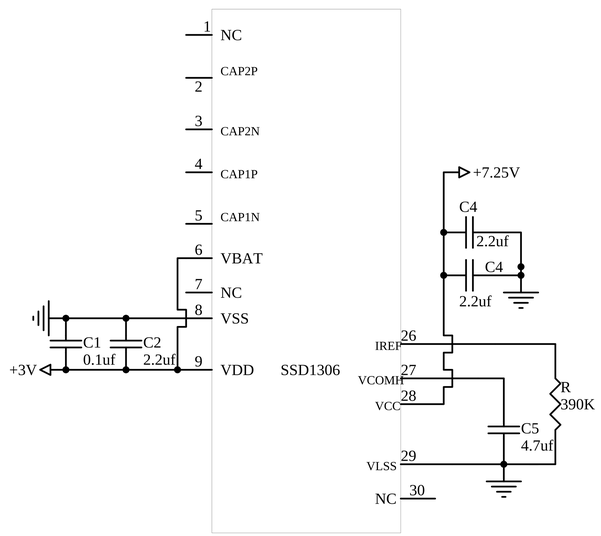

REV.	DESCRIPTION OF MODIFY	MODIFY BY	DATE
A0	1'ST DESIGN	JIM	03.Feb.2010
A1	Modify DB7 to No. 25	JIM	26.Jul.2013

Title **EASTRISING TECHNOLOGY CO.,LTD.**

Size A | Number ER-OLED010-1 | Revision A0

Date: 03-Feb-2010 | Sheet of 1

File | Drawn By Javen