Interfacing OLED Display ER-OLED024-2 Series to the MCU STC89LE52RC

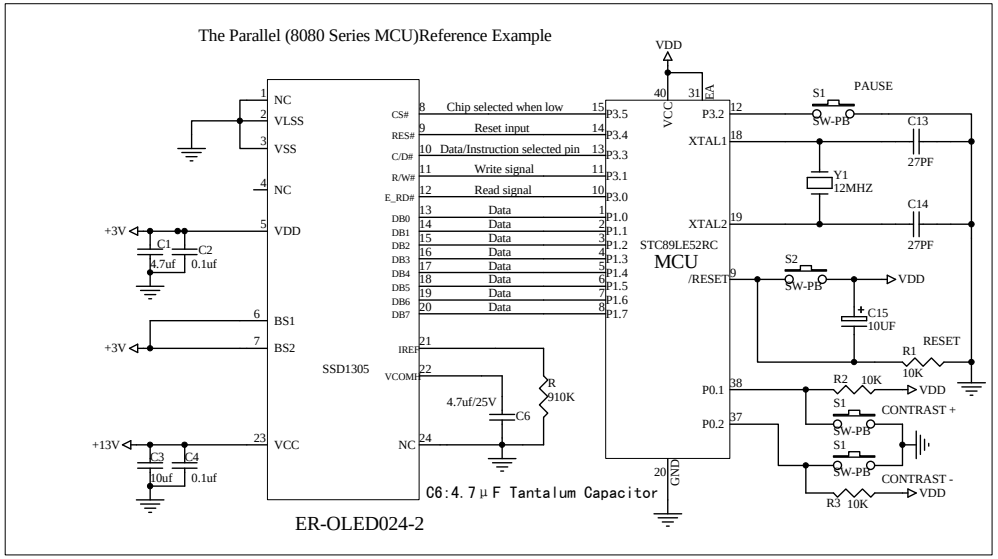

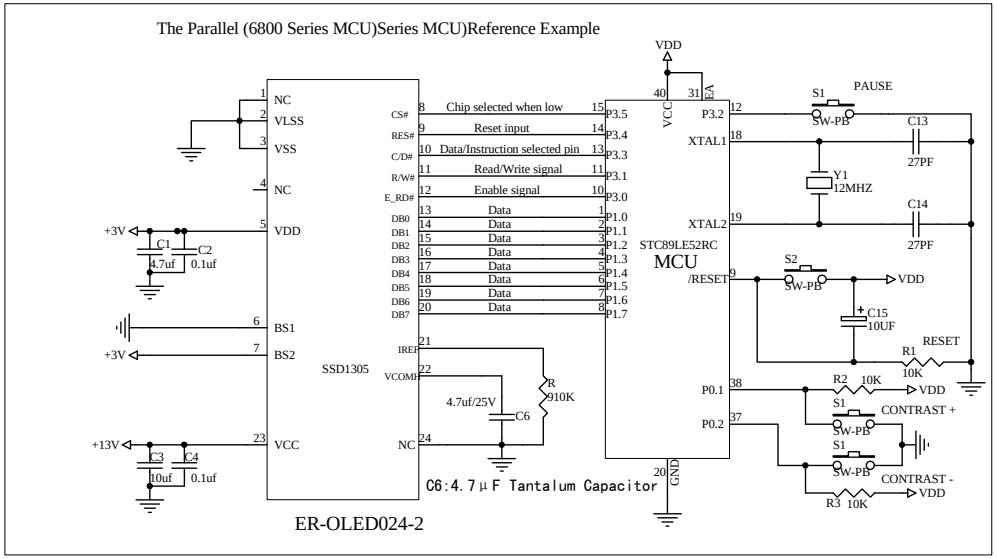

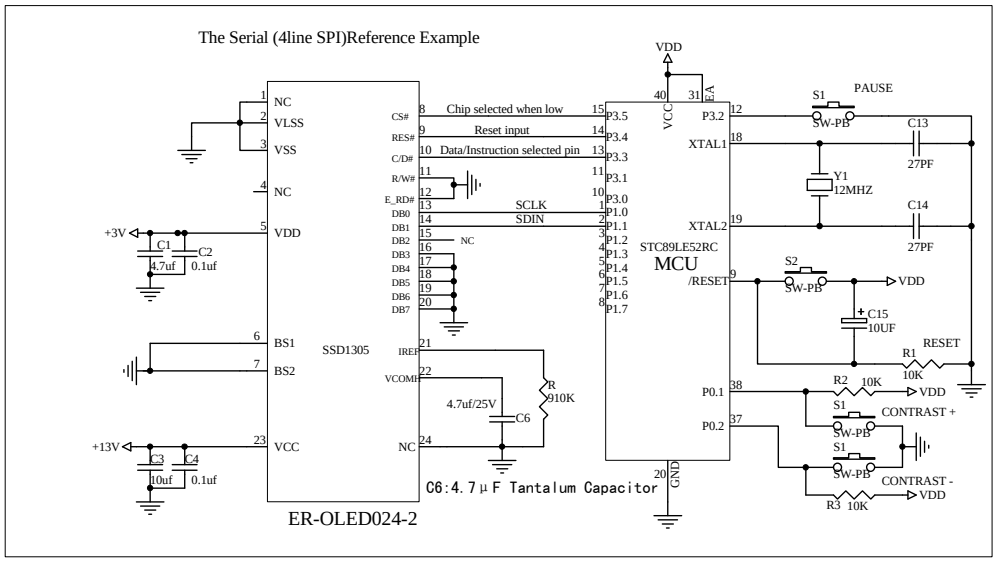

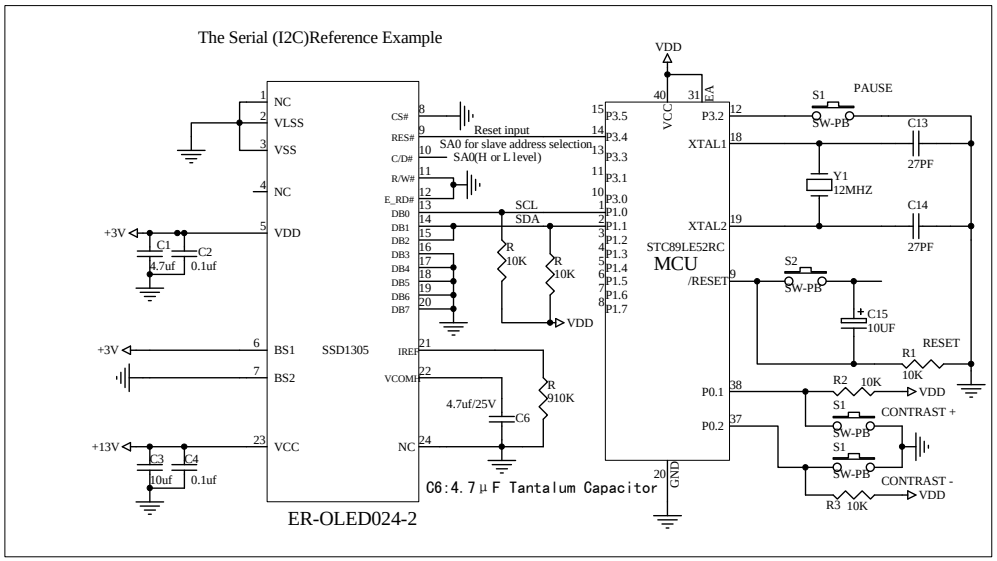

Title	EASTRISING TECHNOLOGY CO.,LTD.		
Size A	Number ER-OLED024-2 Series		Revision A0
Date: Feb-06-2018		1	
File		Drawn By Javen	