Interfacing TFT Module ER-TFTM0.96-1 to MCU STC12LE5A60S2

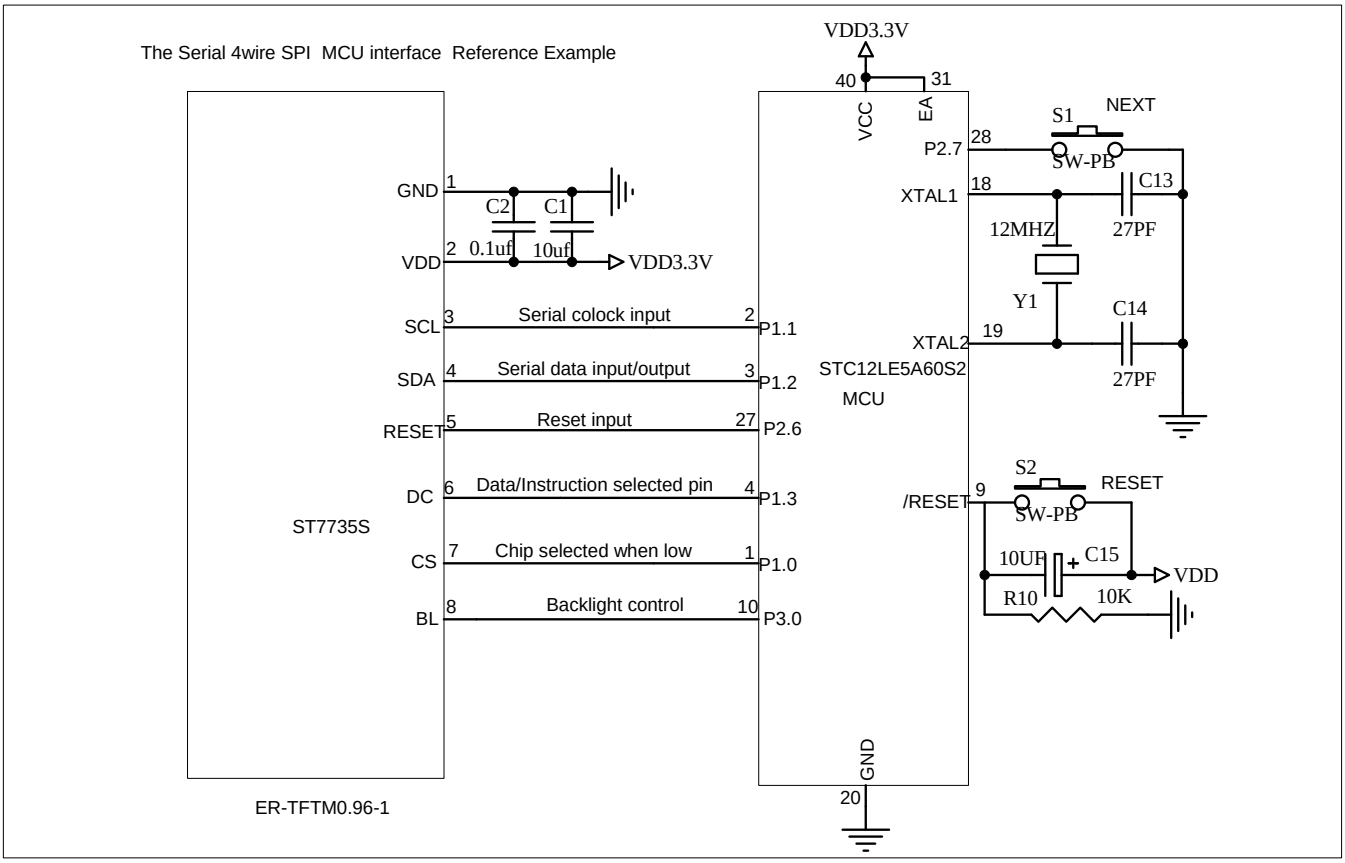

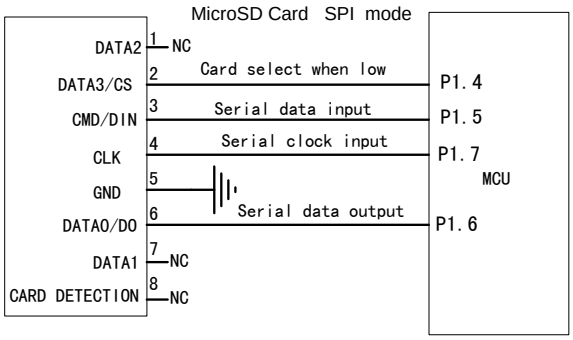

REV.	DESCRIPTION OF MODIFY	MODIFY BY	DATE
A0	1'ST DESIGN	JIM	Oct/27/2018
A1			
A2			

Title	EASTRISING TECHNOLOGY CO.,LTD.		
Size A	Number ER-TFTM0.96-1		Revision A0
Date: Oct /27/2018		Sheet of 1	
File		Drawn By Javen	