Interfacing TFT LCD Module ER-TFTM026-1 to MCU STC12LE5A60S2

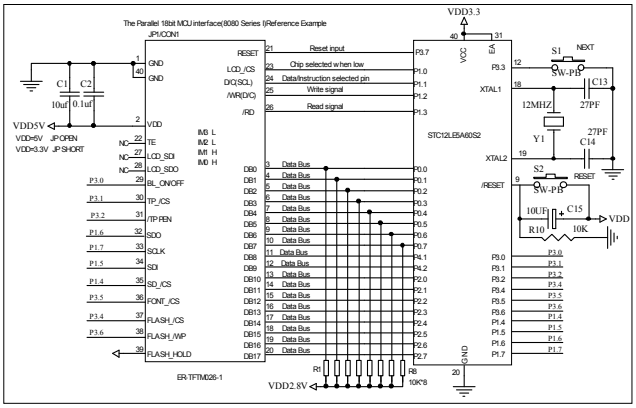

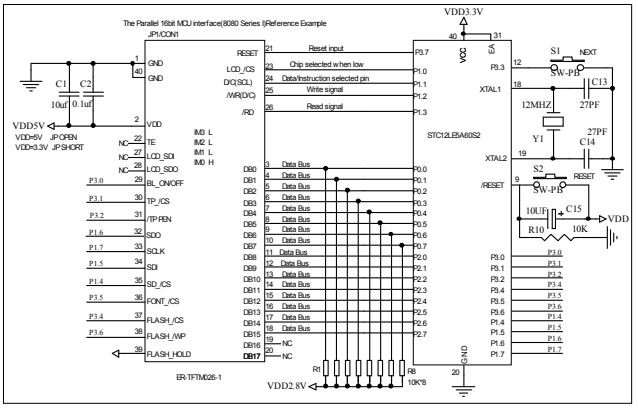

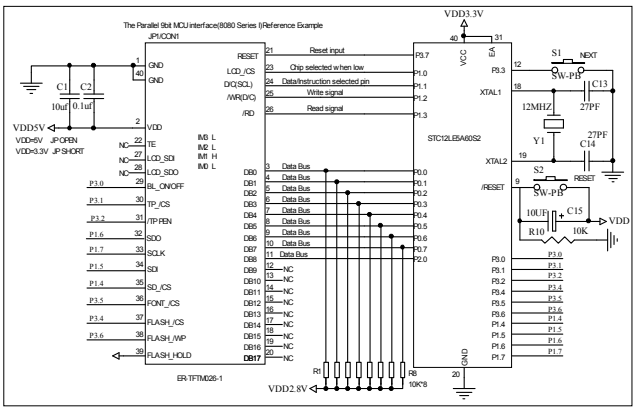

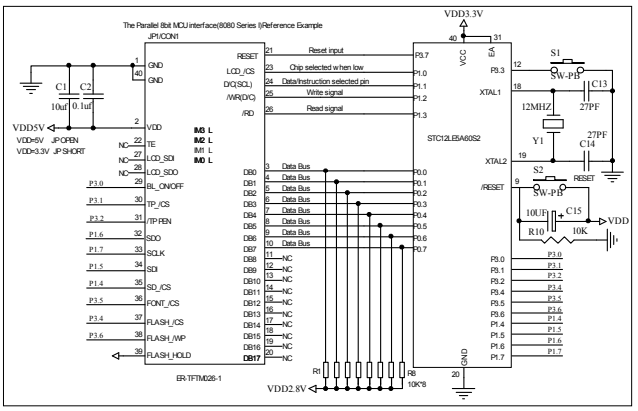

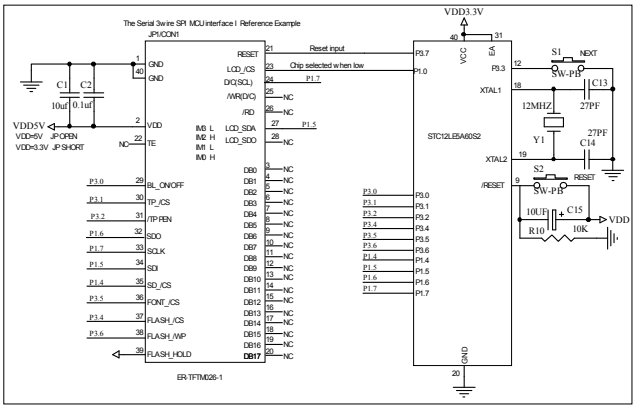

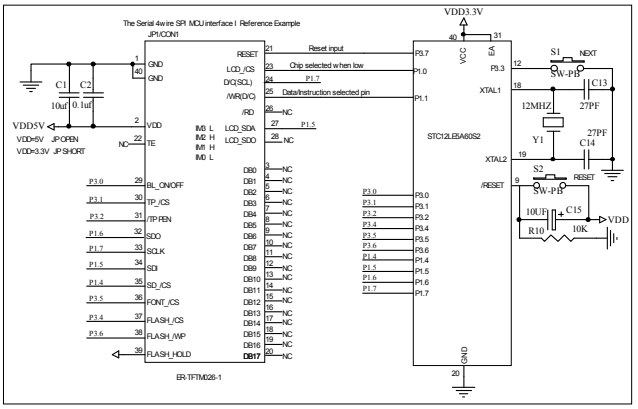

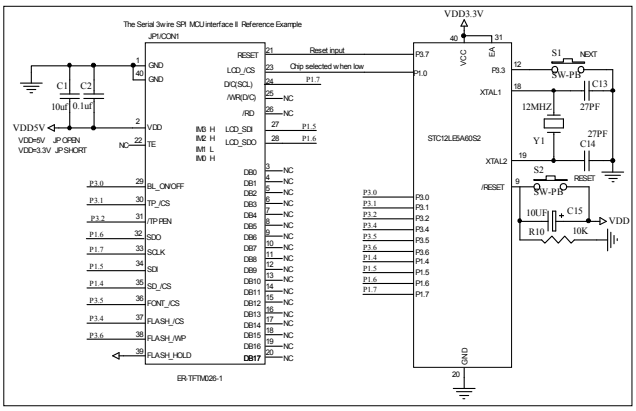

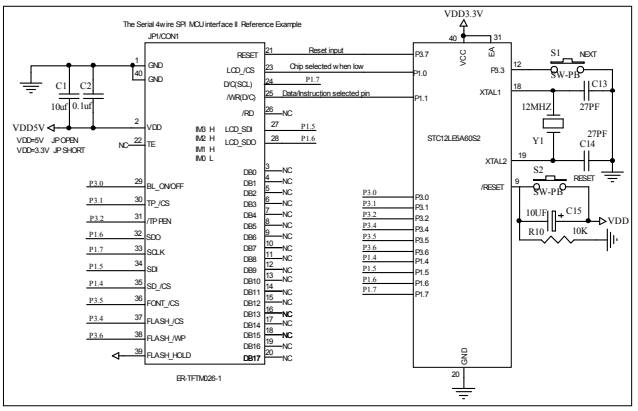

RGB Interfacing LCD Modules to the LCD Controller or Built-in LCD controller MCU

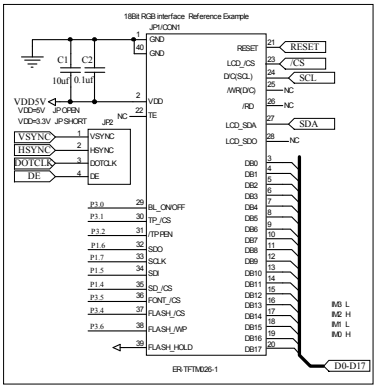

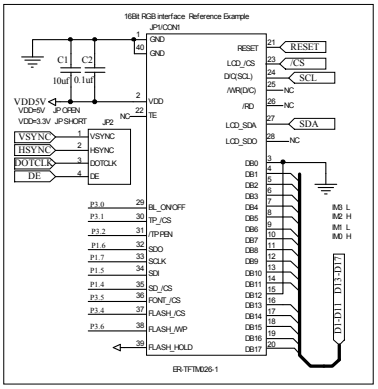

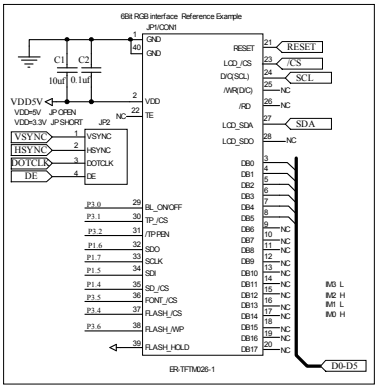

EastRising
buydisplay.com

REV.	DESCRIPTION OF MODIFY	MODIFY BY	DATE
A0	1'ST DESIGN	JIM	2014.07.25
A1			
A2			

EastRising Technology Co.,Ltd

Size A	ER-TFTM026-1 Interfacing Doc	Revision	A0
Date: 25-JUL-2014		Sheet of	1
File		Drawn By	Javen