Interfacing TFT LCD Module ER-TFTM070-6 with Capacitive Touch Panel to MCU STC12LE5A60S2

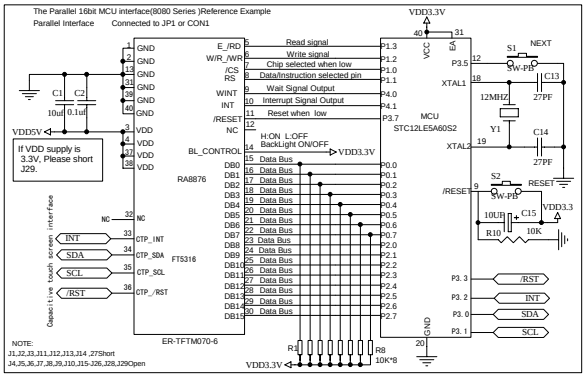

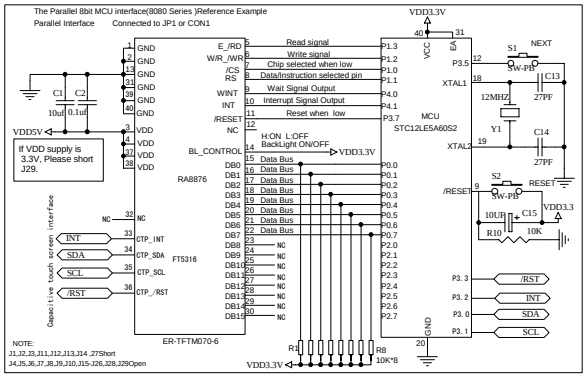

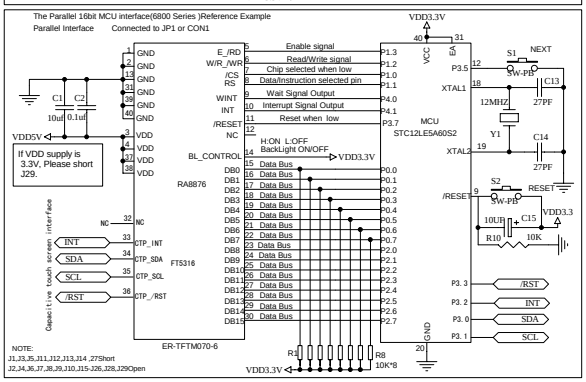

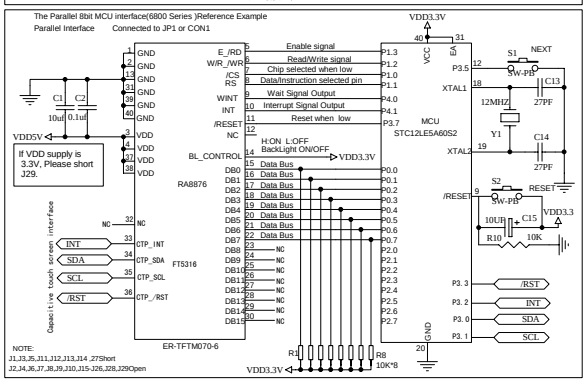

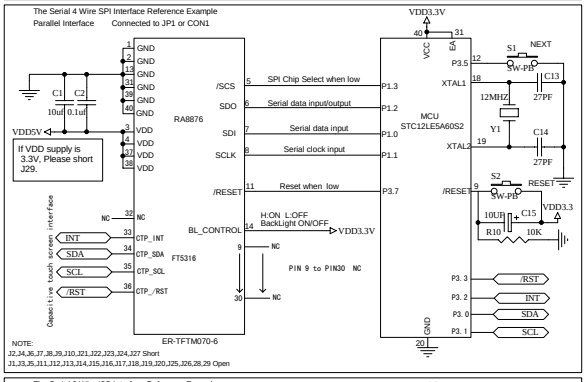

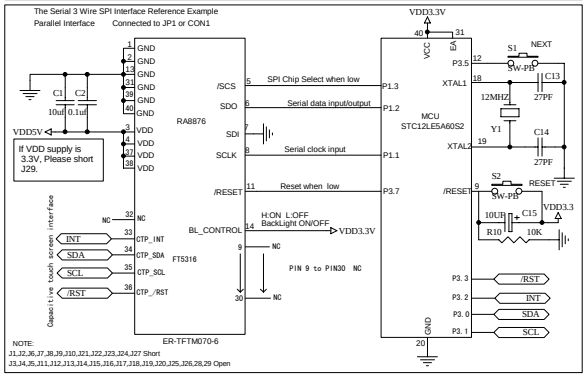

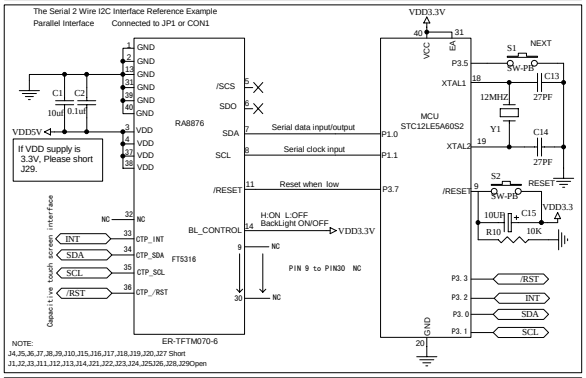

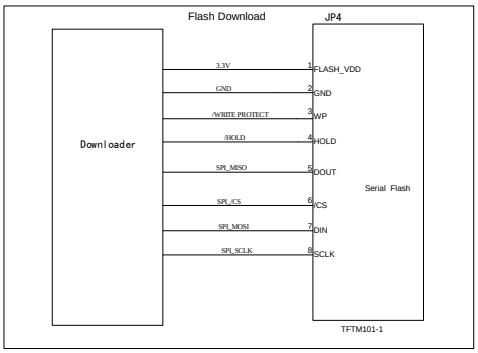

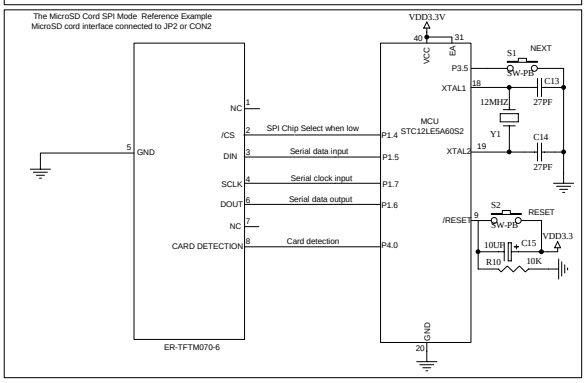

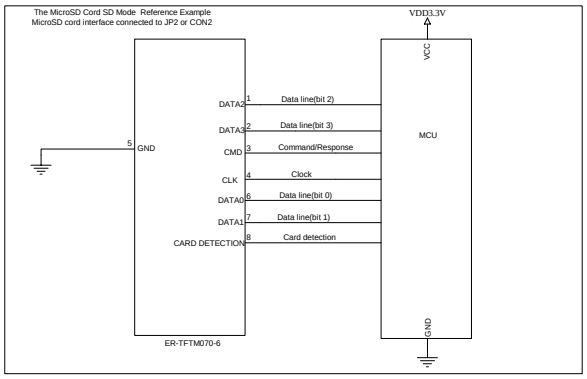

CTP is the short for Capacitive Touch Panel

REV.	DESCRIPTION OF MODIFY	MODIFY BY	DATE
A0	1'ST DESIGN	JIM	Nov-10-2017

Title	EASTRISING TECHNOLOGY CO.,LTD.	
Size A	Number ER-TFTM070-6 WITH CTP	Revision A0
Date: Nov-10-2017	Sheet of 1	
File	Drawn By JIM	