Interfacing Graphic LCD Display ERC12864-10 to the MCU STC89LE52RC

The Parallel (8080 Series MCU)Reference Example

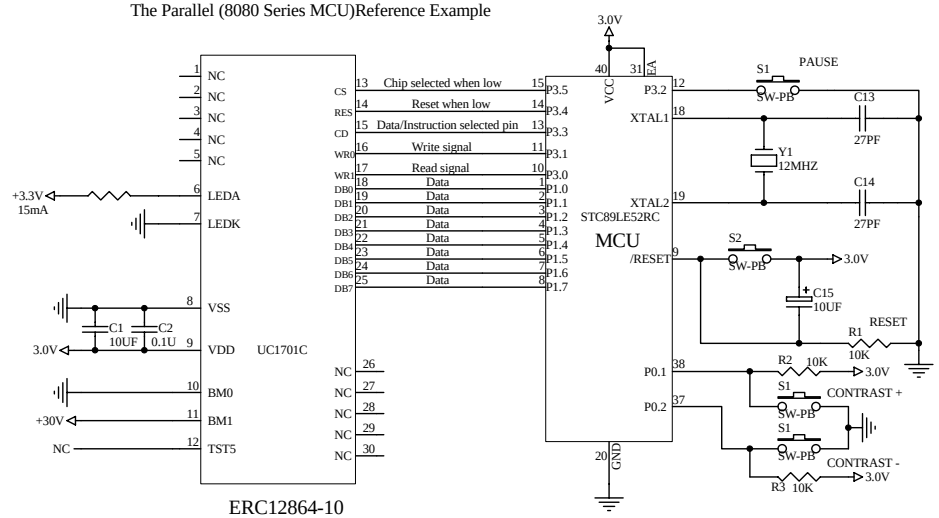

The Parallel (6800 Series MCU)Series MCU)Reference Example

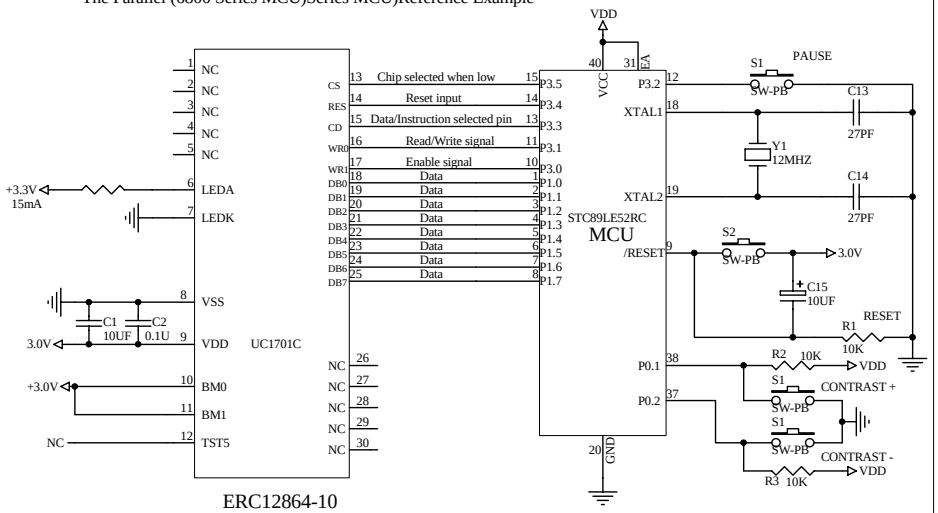

The Serial (4line SPI)Reference Example

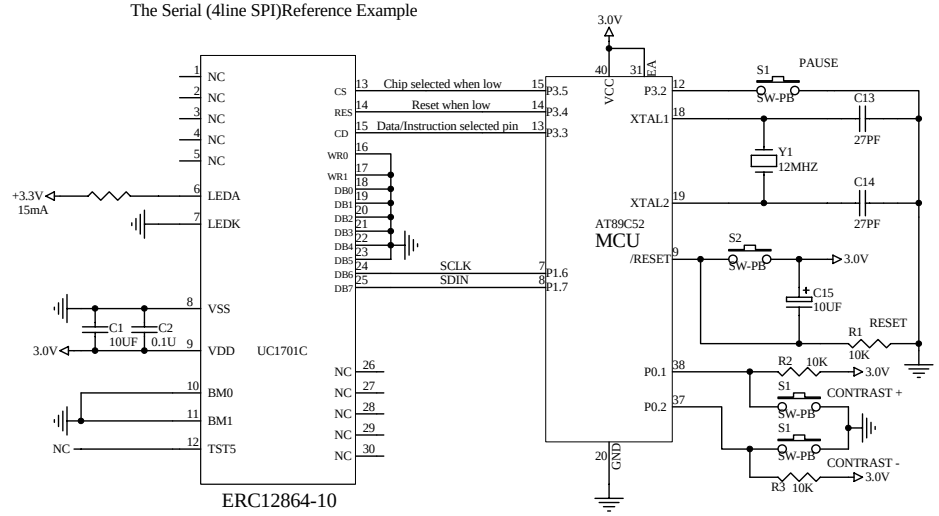

The Serial (I2C)Reference Example

PIN 16 and PIN 17: These two specifies bits 3~2 of device address (A[3:2]).

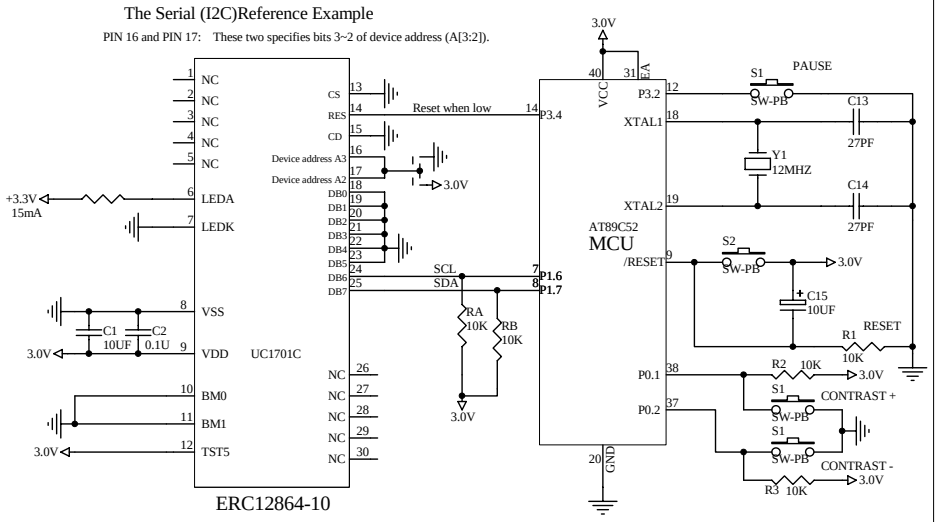

REV.	DESCRIPTION OF MODIFY	MODIFY BY	DATE
A0	1'ST DESIGN	JIM	Nov-18-2017
A1			

Title	EASTRISING TECHNOLOGY CO.,LTD.	
Size A	Number ERC12864-10	Revision A0
Date: Nov-18-2017		Sheet of 1
File		Drawn By Javen