Interfacing Graphic LCD Display ERC25664-1 Series to the MCU STC89LE516RD

The Parallel (8080 8bit Series MCU)Reference Example

Reference circuit using internal Hi-V generator circuit

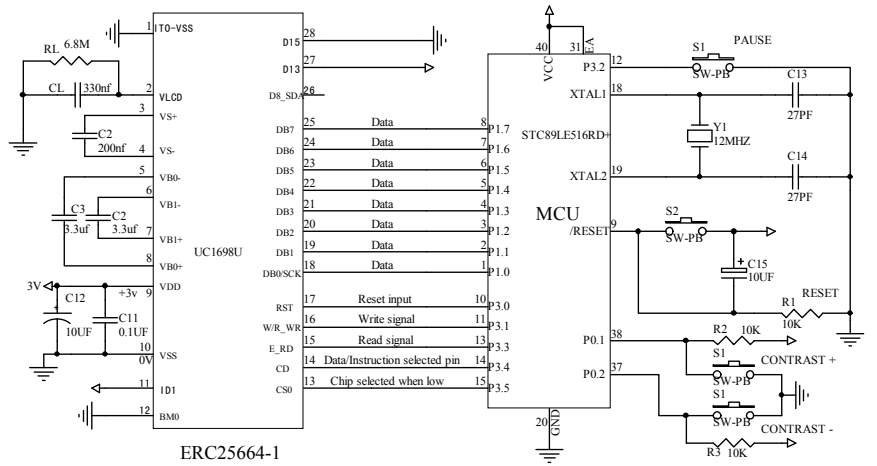

ERC25664-1

The Parallel (6800 8bit Series MCU)Reference Example

Reference circuit using internal Hi-V generator circuit

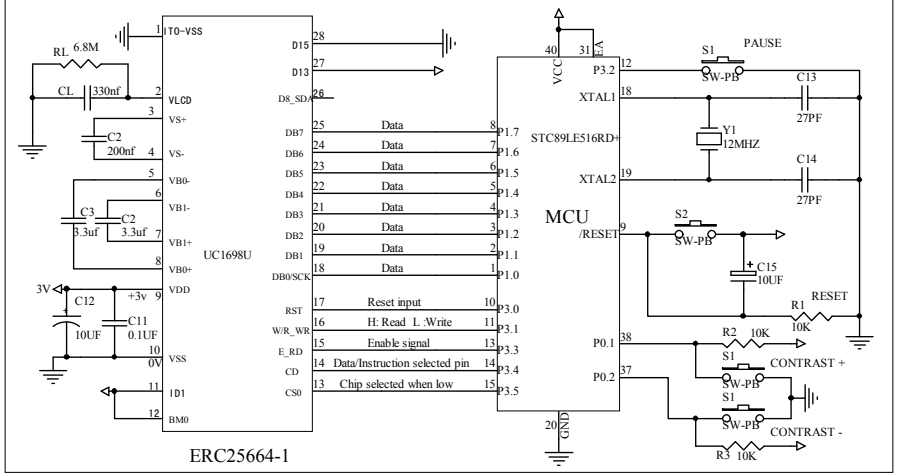

ERC25664-1

The Serial (4 LINE SPI S8)Reference Example

Reference circuit using internal Hi-V generator circuit

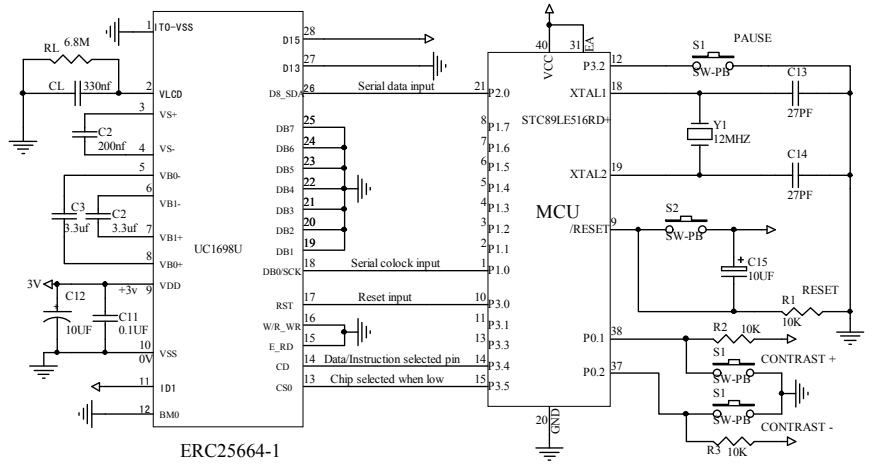

ERC25664-1

The Serial (3 LINE SPI S9)Reference Example

Reference circuit using internal Hi-V generator circuit

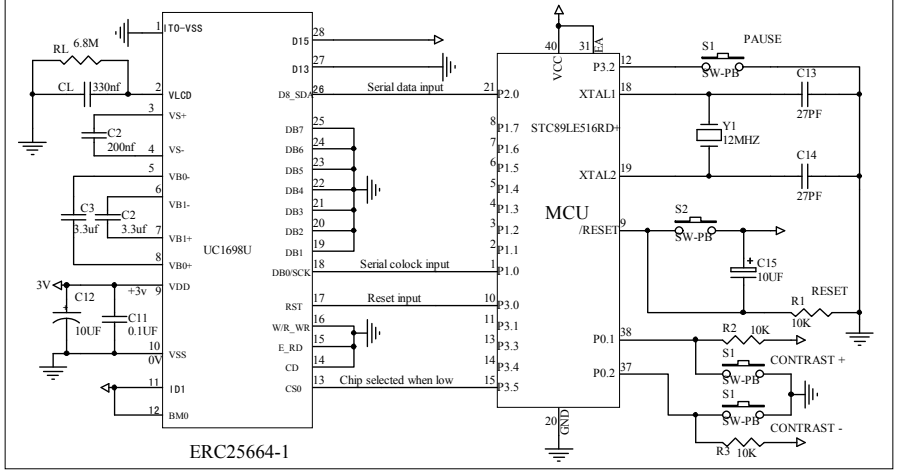

ERC25664-1

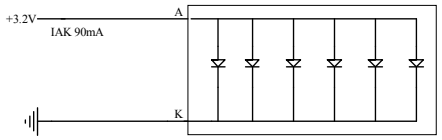

LED Backlight

REV.	DESCRIPTION OF MODIFY	MODIFY BY	DATE
A0	1'ST DESIGN	JIM	Jun-25-2016
A1			
A2			

Title	EASTRISING TECHNOLOGY CO.,LTD.	
Size A	Number ERC25664-1	Revision A0
Date: Jun-25-2016		Sheet of 1
File		Drawn By Javen