Interfacing e-Paper Display Module to Arduino

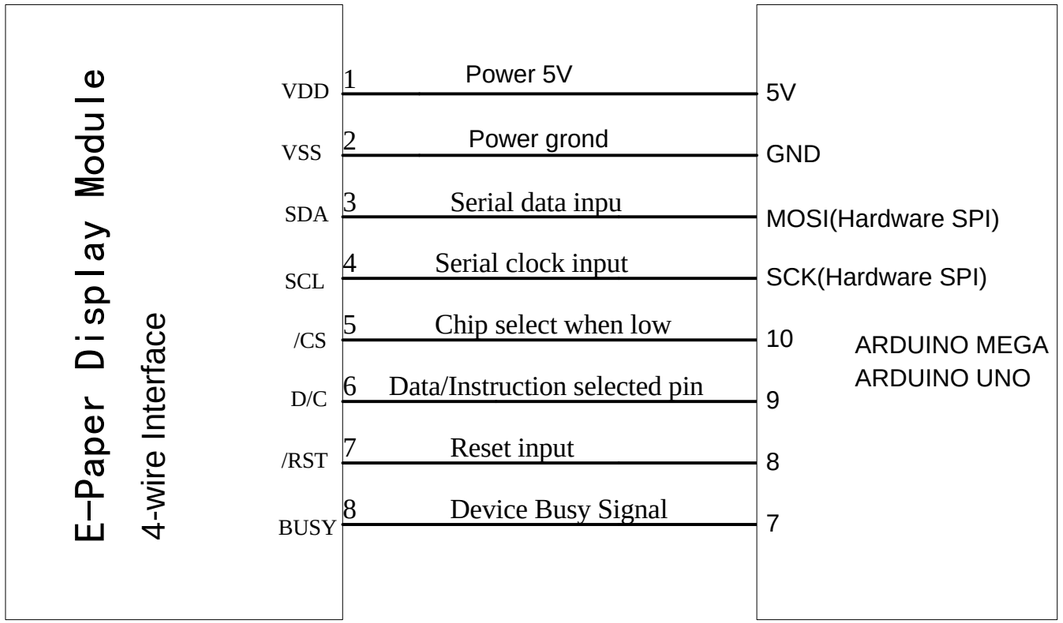

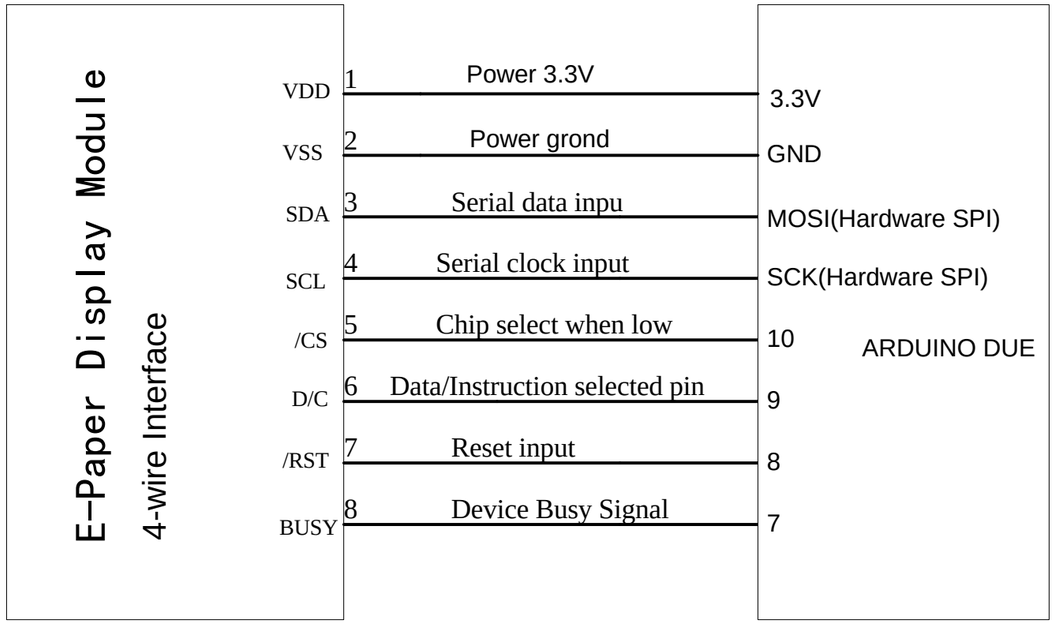

REV.	DESCRIPTION OF MODIFY	MODIFY BY	DATE
A0	1'ST DESIGN	JIM	05-Sep-2019
A1			

Title **EASTRISING TECHNOLOGY CO.,LTD.**

Size A

Revision A0

Date: 05-Sep-2019

Sheet of 1

File

Drawn By Javen