Customer:	Customer NO:	Customer Approve By:

REV	DESCRIPTION OF MODIFY	MODIFY BY	DATE
A0	1'ST,DESIGN	JIM	Oct-10-2018

Capacitive Touch USB Driving Board

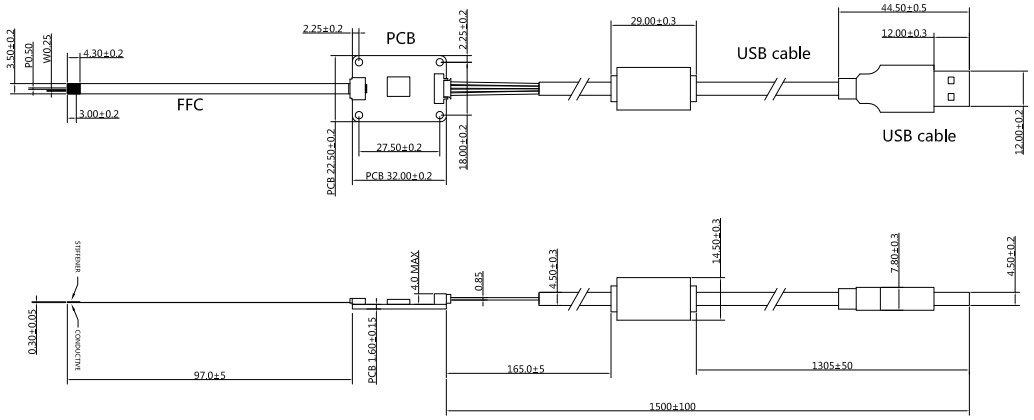

Capacitive Touch Screen

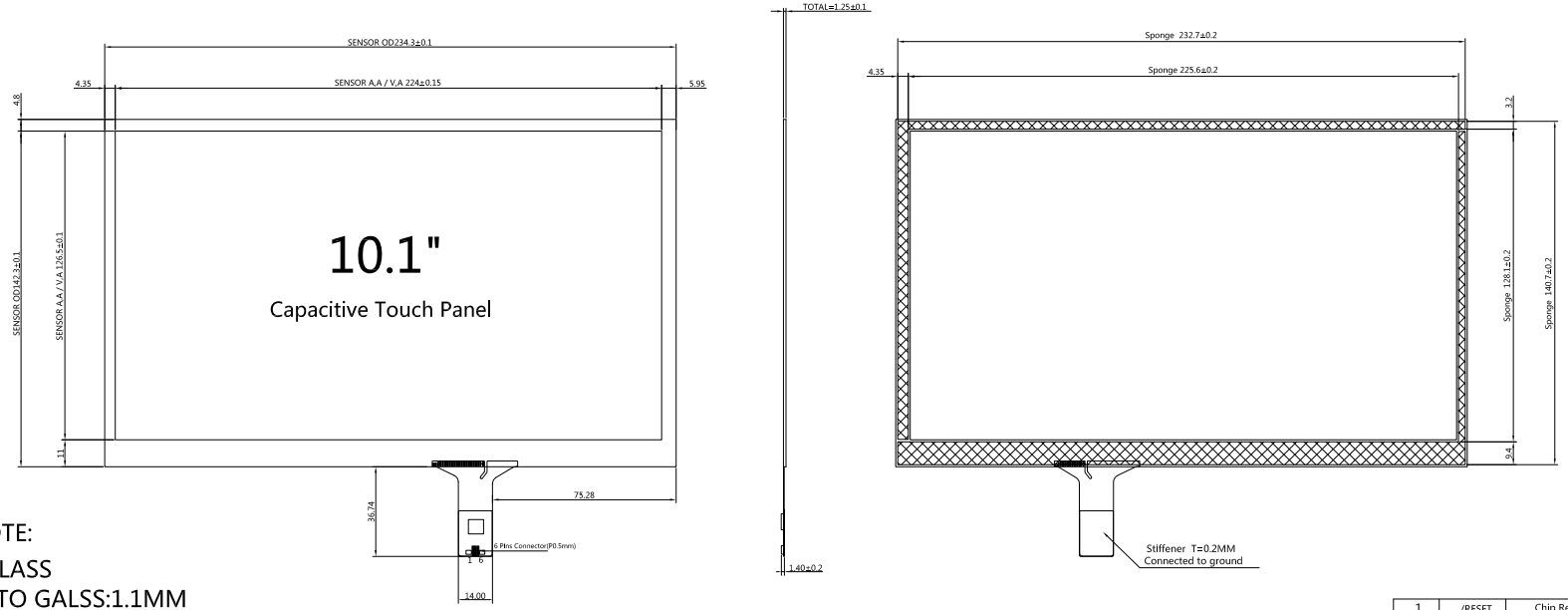

NOTE:

1.GLASS
ITO GALSS:1.1MM
Explosion-Proof Membrane:0.15MM
2. IC:GT911 USB DRIVE BOARD
3.OPERATING VOLTAGE: 2.8-3.3V
4.TRANSMITTANCE: >= 80%
5.SURFACE HARDNESS: 3H
6.OPERATING TEMP: -20 ~ +70°C ≤90%RH
7.STORAGE TEMP: -30 ~ +80°C ≤90%RH
8.OD=Outline Dimension
9.AA=Active Area VA=Visual Area

1	/RESET	Chip Reset
2	VDD	Supply Voltage
3	GND	Ground Connection
4	/INT	Interrupt Signal
5	SDA	I2C Data Line
6	SCL	I2C Clock Line

EastRising buydisplay.com

深圳旭日东方科技有限公司
EASTRISING TECHNOLOGY CO.,LTD

Web: www.buydisplay.com Email: sales@buydisplay.com

APPROVALS		DATE	MODEL NUMBER :	GENERAL TOL.	UNITS MM
APP			ER-TPC101-3-USB	VERSION	A0
CHK	JACK	Oct-10-2018			
DWN	JIM	Oct-10-2018	SCALE 1:1	PROJECTION	SHEET: 1